linear dimension(Tolerances Standard GB/T 14486-2008)								—	▱	⊥
variable range	to 6	over 6 to 10	over 10 to 30	over 30 to 60	over 60 to 100	over 100 to 160	over 160 to	to 10	over 10 to 100	over 100 to
tolerance	±0.20	±0.30	±0.50	±0.70	±1.00	±1.30	±1.60	0.10	0.30	0.60

REVISION RECORD				
REV.	DESCRIPTION	ECN No.	APPROVED	DATE
A			CLF	21.10.16

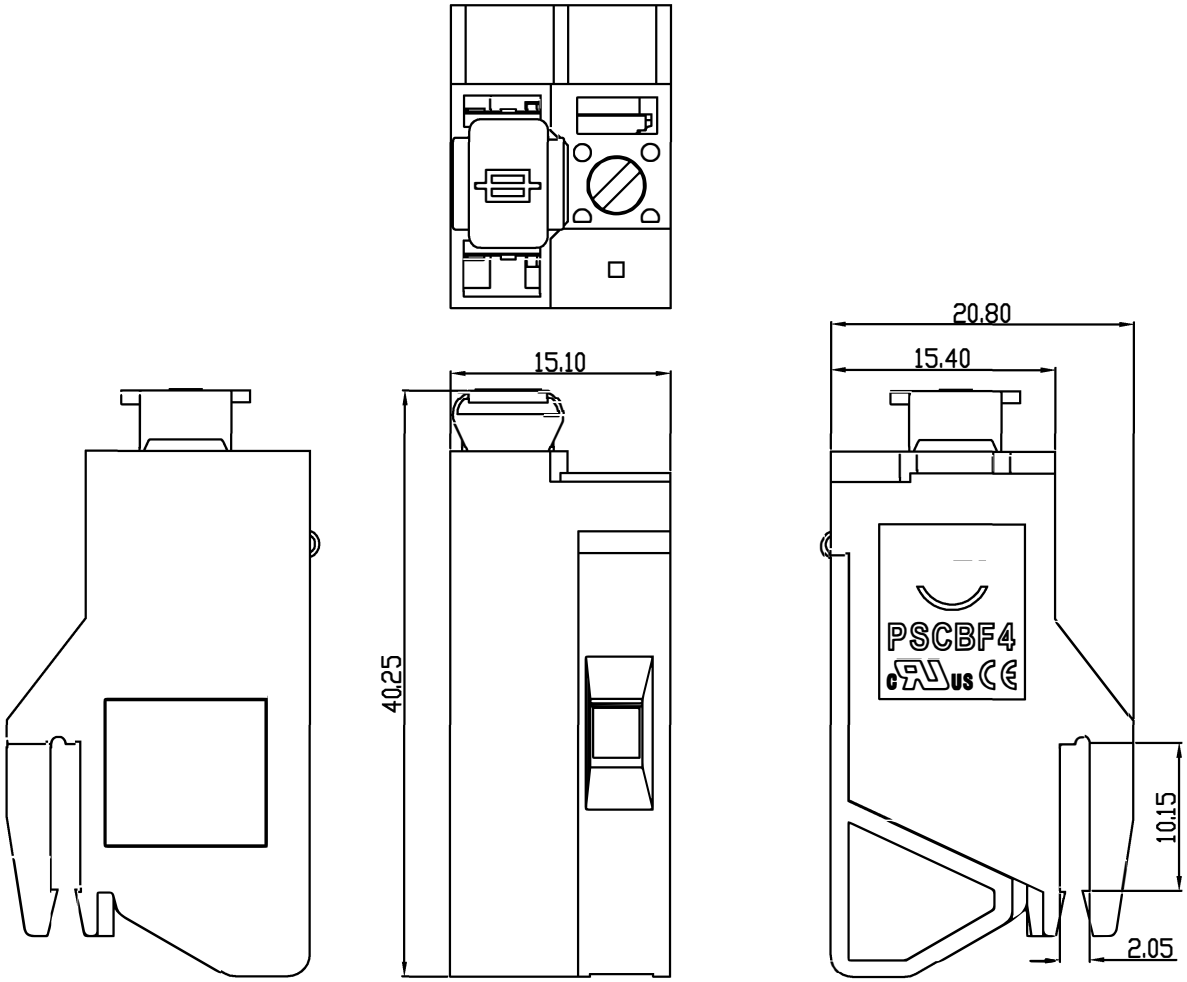

UL/CUL UL/CUL Technical Data			
Use Group	B	C	D
Rated Voltage [V]	250	-	-
Rated Current [A]	6.3	-	-
Wire Range Solid/Stranded [AWG]	20-14		

IEC IEC Technical Data	
Rated Voltage [V]	250
Rated Current [A]	6.3
Withstanding Voltage	2000V/1Min
Conductor cross section Solid/ flexible [mm²]	2.5

Material	
Insulation Material	PA66
Imflammability	UL94V-0
Contactor Material	Copper alloy
Contactive Coating	Tin plating

Other Data	
Pitch [mm]	15.1
Poles [P]	1
Stripping Length [mm]	8-10
Screw/ Torque(Max) [N.m]	M3/0.5
Operating temperatur [°C]	-40~+105
Pin Dimensions [mm]	-
PCB Hole Diameter [mm]	-

DES.	SJD	DATE	21.10.16	UNITS	mm	SIZE A4	SCALE	1:1
CHK.	BY	DATE	21.10.16					
APP.	CLF	DATE	21.10.16					

Prodin Ferrite S.L.
Calle A, 27, 08620 Sant Vicenç dels Horts. Barcelona (Spain
Tel.: +34 93 672 46 10
info@prodinferrite.com www.prodinferrite.com

/THIRD ANGLE PROJECTION

REV A

TITLE PSCBF4-15.1