linear dimension(Tolerances Standard GB/T 14486-2008)								—	▱	⊥
variable range	to 6	over 6 to 10	over 10 to 30	over 30 to 60	over 60 to 100	over 100 to 160	over 160 to	to 10	over 10 to 100	over 100 to
tolerance	±0.20	±0.30	±0.50	±0.70	±1.00	±1.30	±1.60	0.10	0.30	0.60

REVISION RECORD				
REV.	DESCRIPTION	ECN No.	APPROVED	DATE
A			CLF	21.12.01

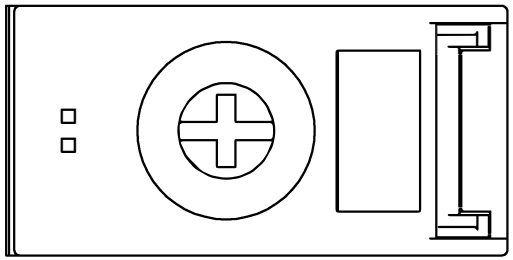

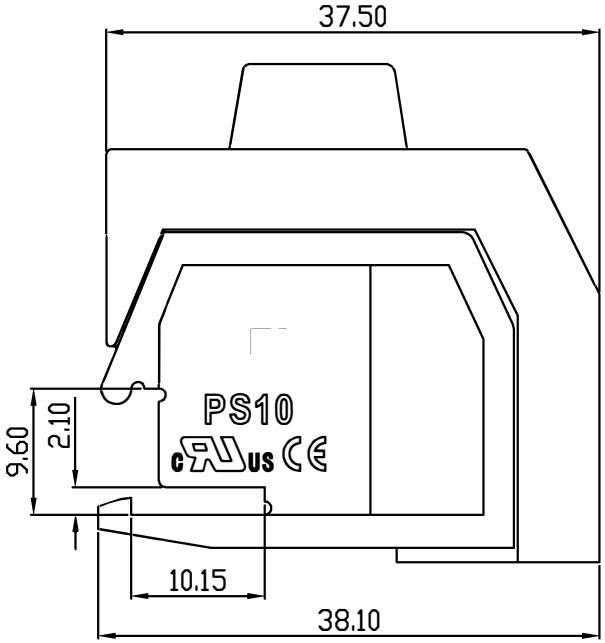

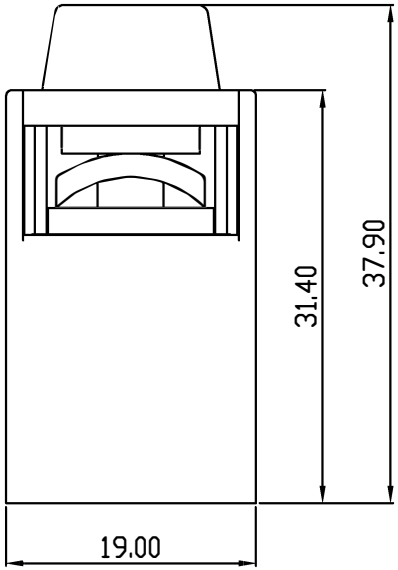

UL/CUL UL/CUL Technical Data			
Use Group	B	C	D
Rated Voltage [V]	300	-	-
Rated Current [A]	55	-	-
Wire Range Solid/Stranded [AWG]	20-6		
IEC IEC Technical Data			
Rated Voltage [V]	750		
Rated Current [A]	57		
Withstanding Voltage	3000V/1Min		
Conductor cross section Solid/ flexible [mm²]	10		
Material			
Insulation Material	PA66		
Imflammability	UL94V-0		
Contactor Material	Copper alloy		
Contactive Coating	Ni plating		
Other Data			
Pitch [mm]	19.0		
Poles [P]	1		
Stripping Length [mm]	8-10		
Screw/ Torque(Max) [N.m]	M5/2.0		
Operating temperatur [°C]	-40~+105		
Pin Dimensions [mm]	-		
PCB Hole Diameter [mm]	-		

DES.	SJD	DATE	21.12.01	UNITS mm	SIZE A4	SCALE 1:1	/THIRD ANGLE PROJECTION
CHK.	BY	DATE	21.12.01				REV A
APP.	CLF	DATE	21.12.01				TITLE PS10-19.0

Prodin Ferrite S.L.
Calle A, 27, 08620 Sant Vicenç dels Horts, Barcelona (Spain)
Tel.: +34 93 672 46 10
info@prodinferrite.com www.prodinferrite.com